Project-In Details

architectural windows
a division of extrusions, inc.

Series 300 Sections

Win-Vent Architectural Windows 2401 S. Main Street Fort Scott Kansas 66701
(620) 223-1111 (800) 295-3113 Fax (620) 223-1139 www.winventwindows.com

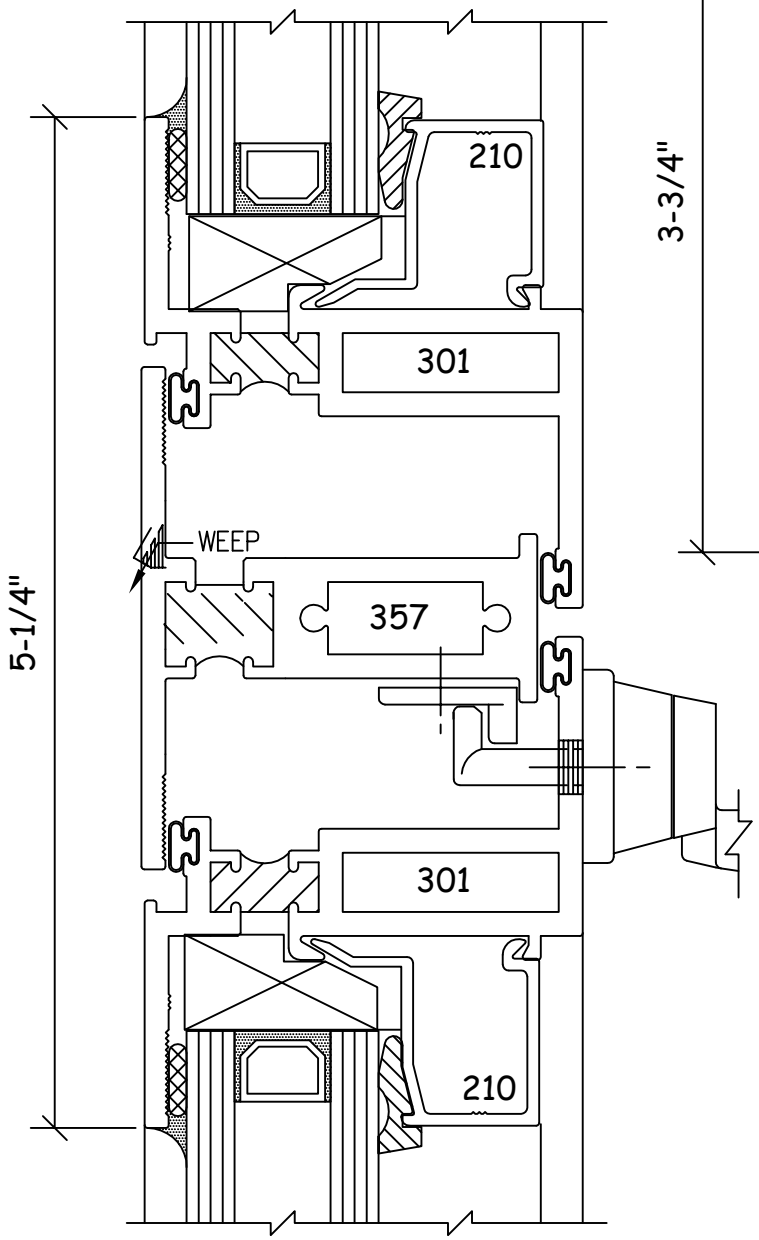

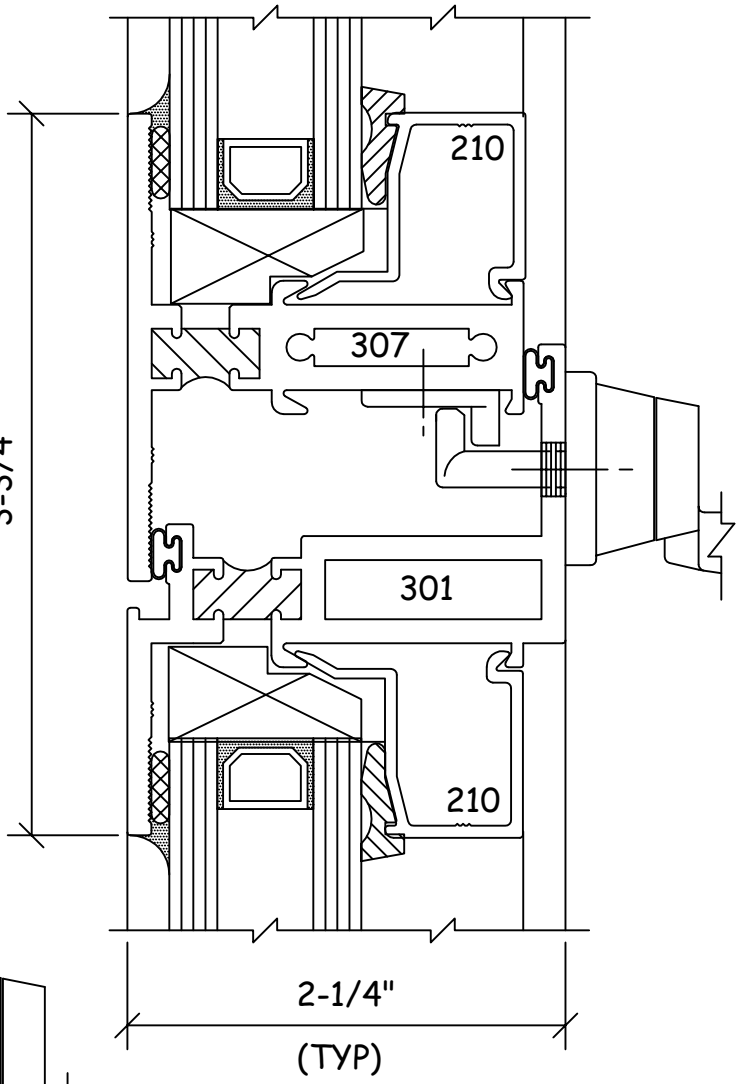

HORIZONTAL MEETING RAIL 6 3B3